LONG SEAMS	
COURSE	ORIENTATION
1	135°

Ship loose items:
NONE

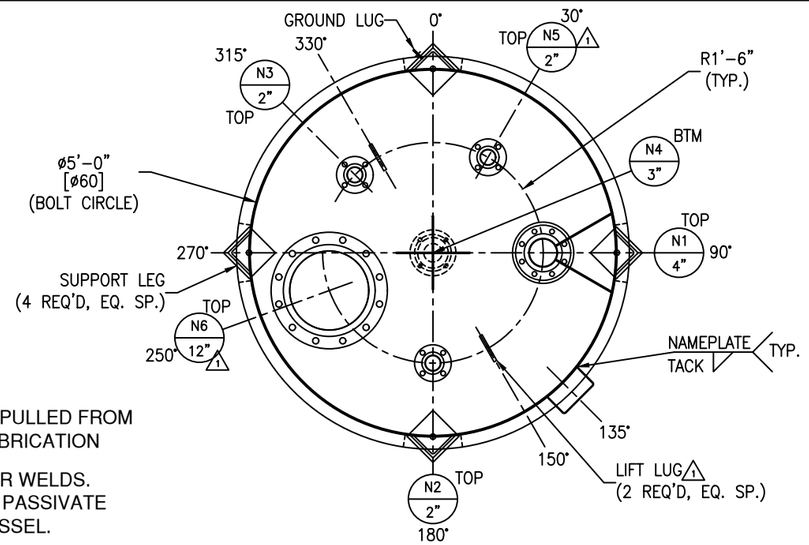

*NOTE: ALL ELEVATIONS ARE PULLED FROM WELD SEAM FOR EASE OF FABRICATION

NOTE 5: PICKLE ALL EXTERIOR WELDS. INTERIOR TO BE #4 POLISH & PASSIVATE INTERIOR & EXTERIOR OF VESSEL.

NOTE 6: INTERIOR WELDS TO BE GROUND SMOOTH NOT FLUSH.

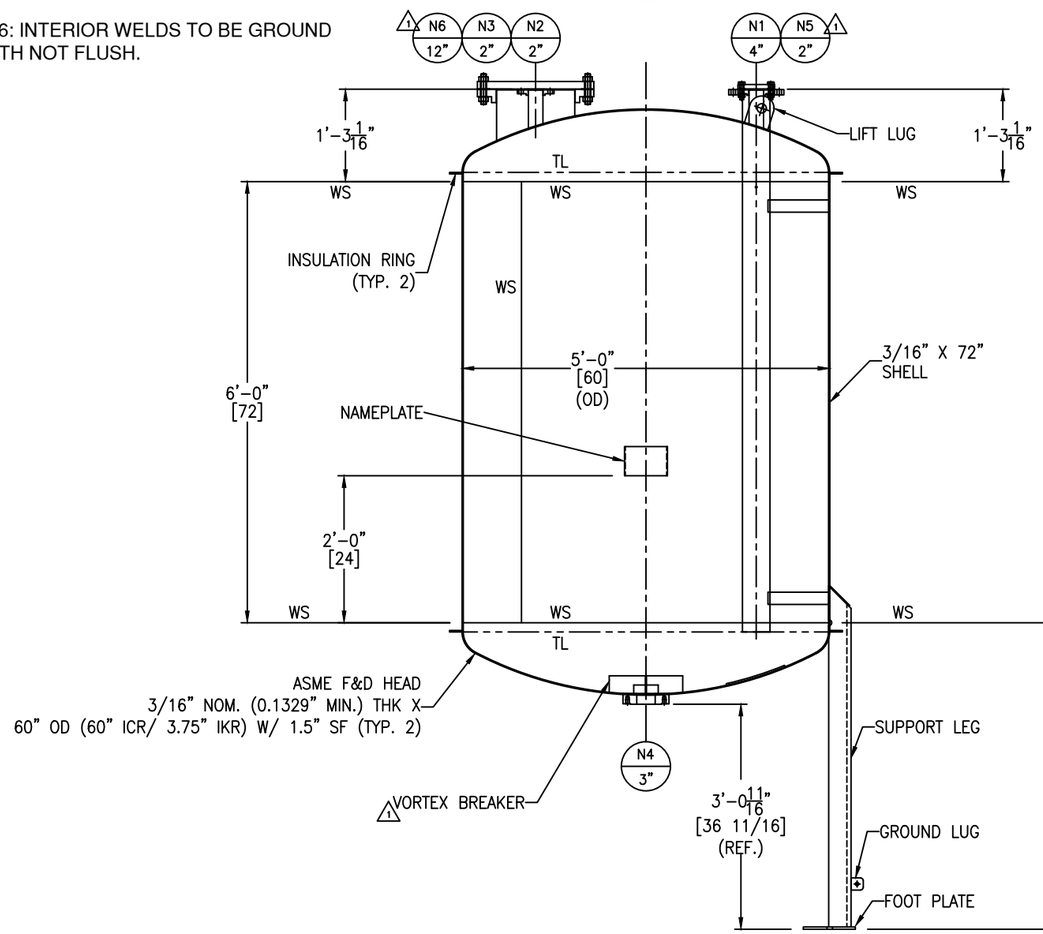

FC-14 GT-11

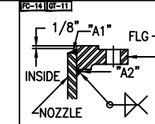

FIGURE NO. 1

FC-14 GT-11

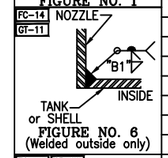

FIGURE NO. 6
(Welded outside only)

FC-14 GT-11

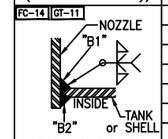

FIGURE NO. 7

FC-14 SA-30

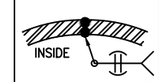

SHELL THK. < 5/16"

FIGURE NO. 9

FC-14 SA-30

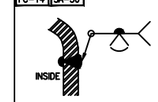

FOR TOP HEAD
FIGURE NO. 11A

FC-14 SA-30

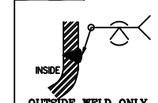

OUTSIDE WELD ONLY
FOR BOTTOM HEAD
FIGURE NO. 11B

NOZZLE SCHEDULE

MARK	SERVICE	SIZE	RATING	TYPE / STYLE	NECK SCHED.	PROJECTION EXT. (E)	PROJECTION INT. (MIN.)	WELD FIGURE	REPAD SIZE (WIDTH X THK.)	WELD SIZE "A1"	WELD SIZE "A2"	WELD SIZE "B1"	WELD SIZE "B2"	WELD SIZE "C1"	WELD SIZE "C2"
N1	INLET	4"	150#	RFSO	40S	SEE DWG	SEE DWG	1,7	–	1/4	3/8	3/16	1/8	–	–
N2	1 VENT	2"	150#	RFSO	40S	SEE DWG	–	1,4	–	3/16	1/4	3/16	1/8	–	–
N3	1 LEVEL	2"	150#	RFSO	40S	SEE DWG	–	1,4	–	3/16	1/4	3/16	1/8	–	–
N4	BOTTOM OUTLET	3"	150#	STUDPAD	–	–	–	4	–	–	–	3/16	1/8	–	–
N5	1 SPARE	2"	150#	RFSO W/ BLIND	40S	SEE DWG	–	1,4	–	3/16	1/4	3/16	1/8	–	–
N6	1 CLEAN OUT	12"	150#	RFSO W/ BLIND	40S	SEE DWG	–	1,4	–	1/4	9/16	3/16	1/8	–	–

MATERIALS OF CONSTRUCTION

	VESSEL
SHELL	SA240-316/316L (#4 POLISH INSIDE)
HEADS	SA240-316/316L (#4 POLISH INSIDE)
RIM ANGLE	–
NOZZLE NECKS	SA312-316/316L WLD (#4 POLISH INSIDE)
NOZZLE NECKS DIPTUBE	SA312-316/316L WLD (#4 POLISH BOTH SIDES)
NOZZLE FLANGES	SA182F-316/316L
VORTEX BREAKER	1 SA312-316/316L WLD (#4 POLISH BOTH SIDES)
MANWAY FLANGES	–
GASKETS	1 PTFE
BOLTS/STUDS	1 SA193-B7 (ZINC PLATED)
NUTS	1 SA194-2H (ZINC PLATED)
STUDPADS	SA182F-316/316L
SUPPORTS/HOLD DOWNS	SA479-304/304L & SA240-304/304L
LIFTING LUGS	SA240-304/304L
WEAR PAD	SA240-316/316L (#4 POLISH ONE SIDE)
INSULATION RINGS	SA240-304/304L
GROUND LUG	SA240-304/304L
BAFFLE	–
LADDER	–
TANK CLIPS (LADDER)	–
HANDRAIL	–
HANDRAIL CLIPS	–
PLATFORM	–
PLATFORM CLIPS	–
DIPTUBE SUPPORT	SA240-316/316L (#4 POLISH BOTH SIDES)
JACKET SHELL	–
JACKET HEADS	–
JACKET NOZZLE NECKS	–
JACKET NOZZLE FLANGES	–

DESIGN DATA

	VESSEL
DESIGN AND FAB. CODE	ASME
CERT. STAMP REQ'D.	YES
DESIGN PRESSURE	15 PSI
DESIGN TEMPERATURE	250° F
MIN. DESIGN METAL TEMP.	-20° F @ 15 PSIG
OPERATING PRESSURE	1 ATM
OPERATING TEMPERATURE	60° F
JOINT EFFICIENCY HEADS	0.70
JOINT EFFICIENCY SHELL	0.70
CORROSION ALLOWANCE	0"
SPECIFIC GRAVITY	1 0.85
EARTHQUAKE ZONE	Ss = (0.550) S1 = (0.160)
WIND LOAD	INDOOR
STRESS RELIEF	NOT REQ'D
RADIOGRAPHIC EXAM	NOT REQ'D
DYE PENETRANT EXAM	NOT REQ'D
MAGNETIC PARTICLE EXAM	NOT REQ'D
HYDROSTATIC TEST	20 PSIG
PNEUMATIC TEST	–
JKT HYDRO TEST	–
JKT DESIGN AND FAB. CODE	–
JKT CERT. STAMP REQ'D.	–
JKT DESIGN PRESSURE	–
JKT DESIGN TEMPERATURE	–
JKT MIN. DESIGN METAL TEMP.	–
JKT OPERATING PRESSURE	–
JKT OPERATING TEMPERATURE	–
JKT JOINT EFFICIENCY HEADS	–
JKT JOINT EFFICIENCY SHELL	–

VESSEL FINISH

INTERIOR WELD TREATMENT:	SEE NOTE 6
EXTERIOR WELD TREATMENT:	SAV TANK STANDARD
SAV TANK FINISHING STANDARD:	SEE NOTE 5
INSULATION:	2" BY OTHERS
PAINTING:	N/A

VESSEL CAPACITY AND WEIGHTS

OPERATING CAPACITY	–
FULL CAPACITY	1,050 GAL.
EMPTY SHIPPING WEIGHT	1 2,100 LBS.
WEIGHT FULL OF WATER	1 10,900 LBS.
WEIGHT FULL OF PRODUCT	1 9,600 LBS.

ASME SECT. VIII, DIV. 1
2023 EDITION

ENG. _____ DATE: _____

Q.C. _____ DATE: _____

A.I. _____ DATE: _____

This drawing is issued for customer approval. please review, make approval changes (if any) in red. check the appropriate box, sign & date.

- ☐ Approval – no changes. Please proceed with fabrication.
- ☐ Approved as noted. Please proceed with fabrication
- ☐ Not approved. Please make changes and resubmit.

Customer signature _____ Date _____

GENERAL NOTES

1.) COVER ALL FLANGES, OPENINGS & MACHINED SURFACES PRIOR TO SHIPMENT UNLESS OTHERWISE NOTED.
2.) BOLT HOLES TO STRADDLE 0° & 180° UNLESS OTHERWISE NOTED.
3.) ASME CODE VESSELS TO BE IN ACCORDANCE WITH UG-80 & UG-81. TOLERANCES: +/- 1/8" FOR DIMENSIONS AND +/- 2 DEGREES FOR ORIENTATIONS.
4.) ASME MATERIALS TO CONFORM TO THE FOLLOWING: FLANGES – B16.5, FITTINGS – B16.9 & COUPLINGS – B16.11.
5.) PICKLE ALL EXTERIOR WELDS. INTERIOR TO BE #4 POLISH & PASSIVATE INTERIOR & EXTERIOR OF VESSEL.
6.) INTERIOR WELDS TO BE GROUND SMOOTH NOT FLUSH (EXCLUDING CLOSING HEAD).

REV	D.BY	C.BY	DATE	DESCRIPTION
2				AS BUILT
1	RS	NP	3/24/26	CERTIFIED
0	AD	RS	2/19/26	APPROVAL

1 REVISIONS

Savannah Tank & Equipment Corp.
1517 Telfair Road, Savannah, GA 31415
(912) 233-8902

DRAWN BY: AD
CHK'D BY: RS
APPROVED BY: NP
SCALE: 3/4" = 1'-0"

EPIC SYSTEMS GROUP, LLC.
CORE CENTRIFUGE LIGHTS RECEIVER
EQUIP. #T-113
CUST. PO #64353

DRAWING NO.: 107-25-1 SHT 1 OF 2 REV. SET 1

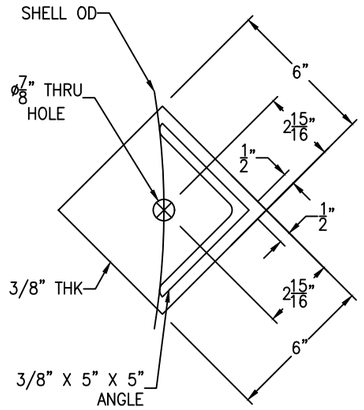

FOOT PLATE DETAIL

(4 REQ'D) SCALE: 3" = 1'-0"

FC-14

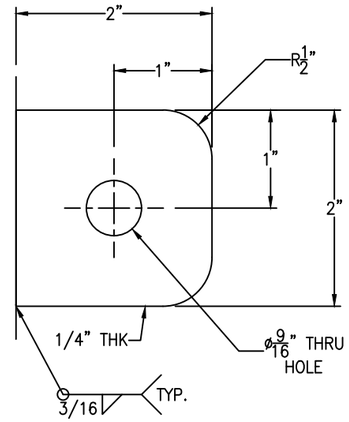

GROUND LUG IS LOCATED @ 0°

GROUND LUG DETAIL

(1 REQ'D) SCALE: 1'-0" = 1'-0"

FC-14

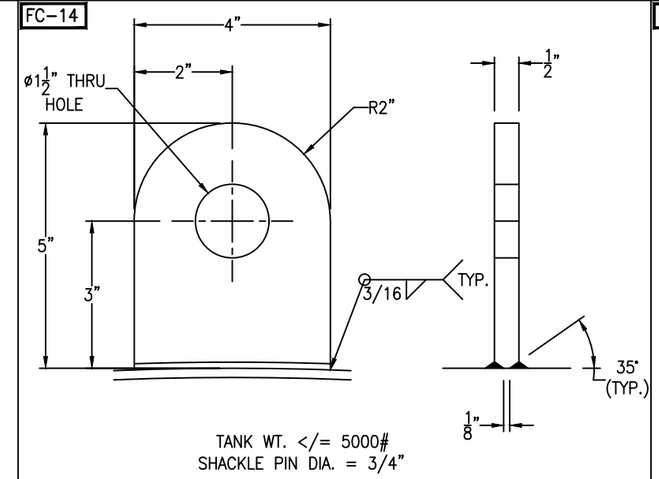

TANK WT. </= 5000#
SHACKLE PIN DIA. = 3/4"

LIFT LUG DETAIL

(2 REQ'D) SCALE: 6" = 1'-0"

FC-14

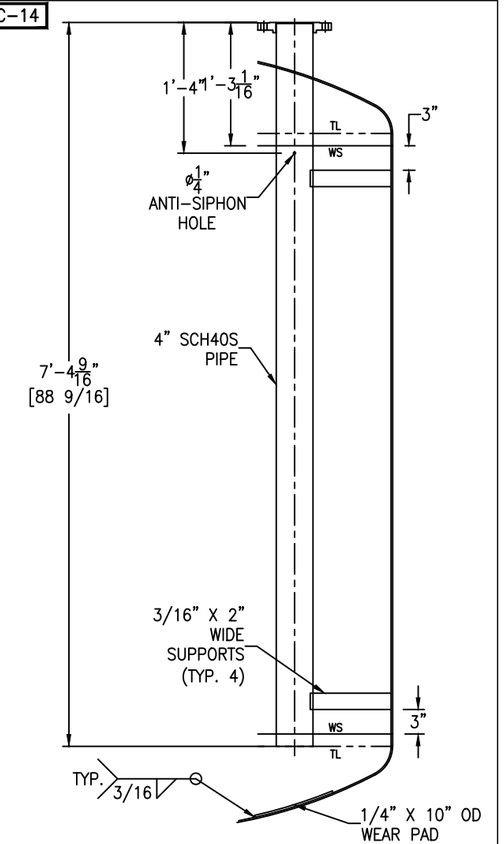

NOZZLE N1 DETAIL

SCALE: 1 = 1'-0"

FC-14

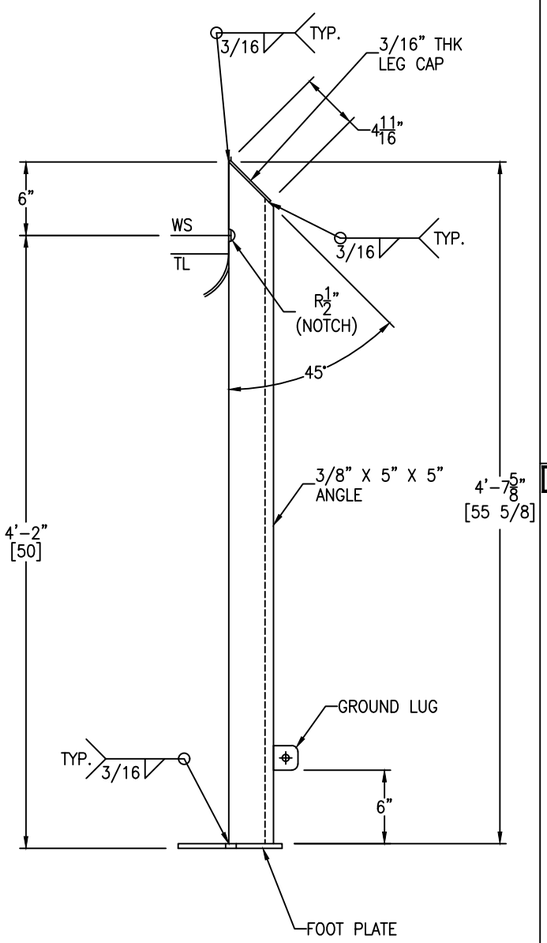

SUPPORT LEG DETAIL

(4 REQ'D) SCALE: 1 1/2" = 1'-0"

FC-14

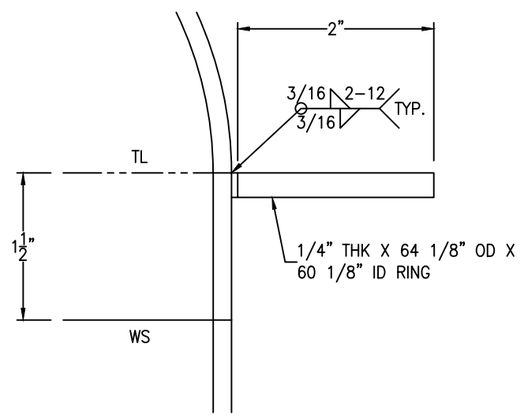

TOP INSULATION RING DETAIL

(1 REQ'D) SCALE: 1'-0" = 1'-0"

FC-14

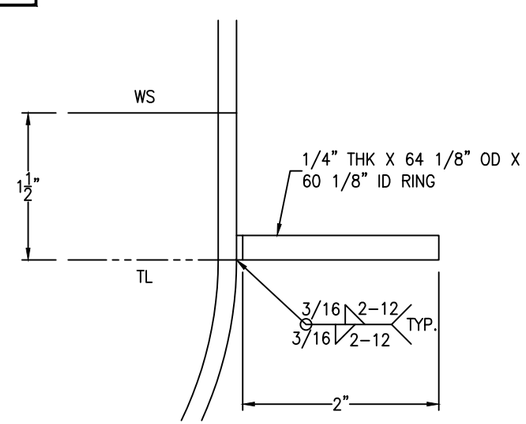

BOTTOM INSULATION RING DETAIL

(1 REQ'D) SCALE: 1'-0" = 1'-0"

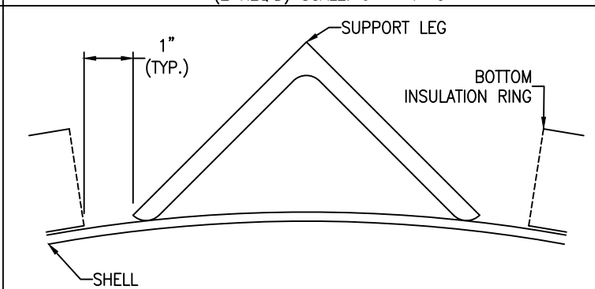

BOTTOM INSULATION RING CUTOUT DETAIL

(4 REQ'D) SCALE: 6" = 1'-0"

FC-14

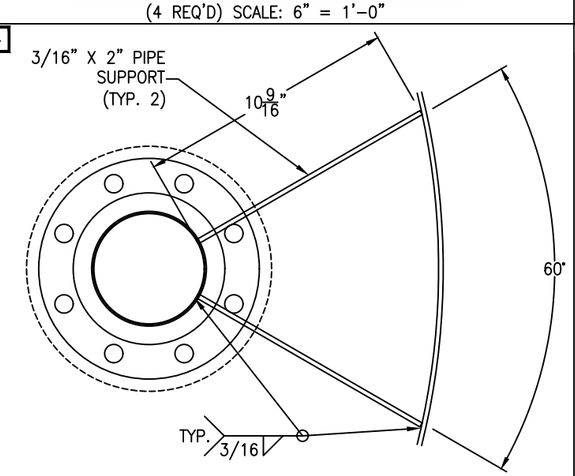

NOZZLE N1 SUPPORT DETAIL

(2 REQ'D) SCALE: 3" = 1'-0"

FC-14

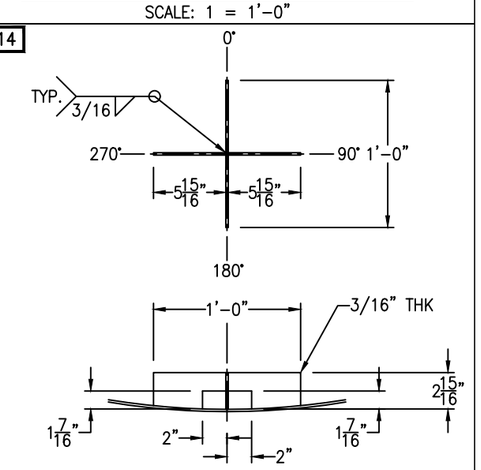

△1 VORTEX BREAKER DETAIL

SCALE: 1 1/2" = 1'-0"

Bolting for blinds △1
N5: (4) 1/2-13 NC x 2" HH BOLT
(4) 1/2-13 NC HH NUT
(1) 2" 150# RING GASKET X 1/8" THK.

N6: (12) 7/8-9 NC x 5" HH FULL THREADED STUD
(24) 7/8-9 NC HH NUT
(1) 12" 150# RING GASKET X 1/8" THK.

REV	D.BY	C.BY	DATE	DESCRIPTION
2				AS BUILT
1	RS	NP	3/24/26	CERTIFIED
0	AD	RS	2/19/26	APPROVAL

△1 REVISIONS

Savannah Tank & Equipment Corp.
1517 Telfair Road, Savannah, GA 31415
(912) 233-8902

DRAWN BY: AD
CHK'D BY: RS
APPROVED BY: NP
SCALE: 3/4" = 1'-0"

EPIC SYSTEMS GROUP, LLC.
CORE CENTRIFUGE LIGHTS RECEIVER
EQUIP. #T-113
CUST. PO #64353

DRAWING NO.: 107-25-2 SHT 2 OF 2 REV. SET 1